LUMINAIRE PHOTOMETRIC TEST REPORT

Report number:

MANUFACTURER: Lamppukauppa Led Store Oy		
ADDRESS: Mesikukantie 16, 01300 VANTAA | www.ledstore.fi		
NAME: LED strip slim SOLO, 4000K, 24V, 7,2W/m, IP65, CRI91	SKU: STRIP72-24V-IP65-4000-COB-SLIM	TYPE: LED
SPECIFICATION: LED light strip	NOTES: Single color	MEASURED BY: Lamppukauppa Led Store Oy

DATA OF LAMP		Imax(cd)	143.9	S/MH(C0/180)	1.32
MODEL		EFFICIENCY(%)	100.0	S/MH(C90/270)	1.32
NOMINAL POWER(W)	7.2	TOTAL FLUX(lm)	579.27	Voltage(V)	24.00
RATED VOLTAGE(V)	24	EFFICIENCY(lm/W)	73.1	Current(A)	0.330
NOMINAL FLUX(lm)	579.3	η up(%)	0.0	Power(W)	7.920
LAMPS QUANTITY	1	η down(%)	100.0	Power Factor(PF)	1.000
TEST VOLTAGE(V)	24.0	Effictive Flux(lm)	579.3	EEI	0.160(A+)

LUMINOUS INTENSITY DISTRIBUTION

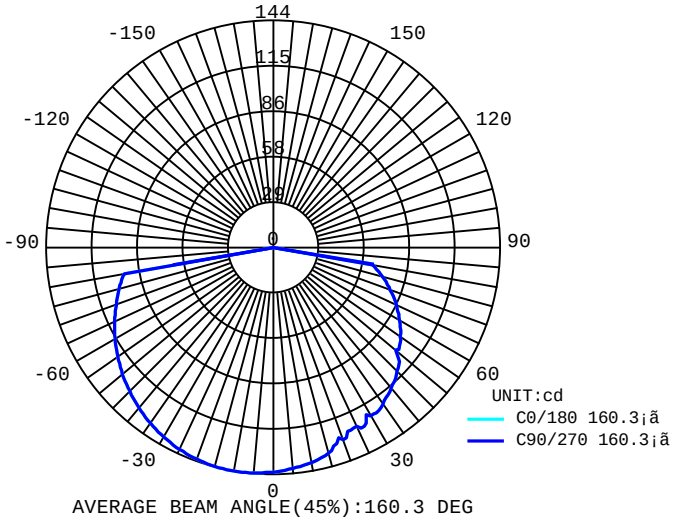

AVERAGE BEAM ANGLE(45%):160.3 DEG

Test System:HopooColor HP880
Temperature:25.3DEG
Operators:
Test Date:09-20-2024

Test Set: 5.0deg/s C-Gamma (TYPE C)
Humidity:65.0%
Test Distance:1.000 m
Remarks:

Spectrum Chart

Report number:

MANUFACTURER: Lamppukauppa Led Store Oy		
ADDRESS: Mesikukantie 16, 01300 VANTAA | www.ledstore.fi		
NAME: LED strip slim SOLO, 4000K, 24V, 7,2W/m, IP65, CRI91	SKU: STRIP72-24V-IP65-4000-COB-SLIM	TYPE: LED
SPECIFICATION: LED light strip	NOTES: Single color	MEASURED BY: Lamppukauppa Led Store Oy

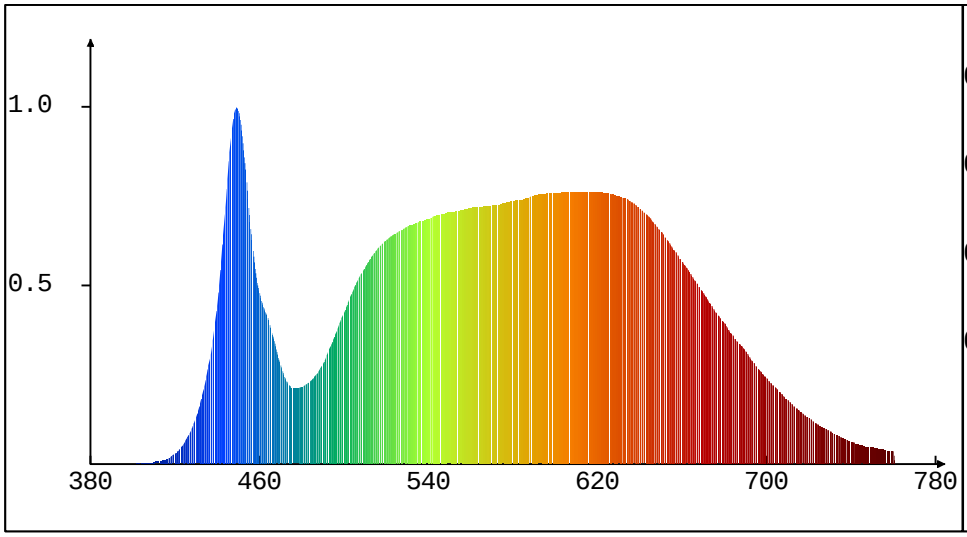

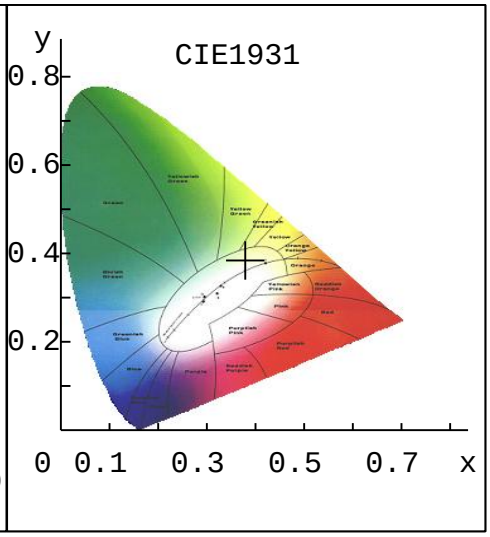

Avg Chro. Para.

CCT: 4028K Chro. Coor.: xa=0.3805 ya=0.3806 u'a=0.2236 v'a=0.5033 ¦¤u'v'=0.0003

Current Angle: C=0.0¡ã G=0.0¡ã

Chroma Parameters

Chro.Coor.: x=0.3801 y=0.3802 u'=0.2235 v'=0.5031 duv=0.0017

CCT: 4034K Dominant Wave: 578.0nm Purity: 28.2% Light Intensity: 285.6cd

Flux RGB Ratio: R=40.2%,G=41.0%,B=18.8% Peak Wave: 447.7nm Half Width: 18.3nm

Rendering Index: Ra= 89.8

R1 =91	R2 =91	R3 =90	R4 =91	R5 =89	R6 =87	R7 =94	R8 =86
R9 =61	R10=78	R11=91	R12=67	R13=90	R14=94	R15=89	

Instrument State

Scan Range: 380nm-780nmIntegral Time: 440.0ms Peak Signal: 440000 Dark Signal: 52561

Test System:HopooColor HP880
Temperature:25.3DEG
Operators:
Test Date:09-20-2024

Test Set: 5.0deg/s C-Gamma (TYPE C)
Humidity:65.0%
Test Distance:1.000 m
Remarks:

AVERAGE AND CENTER E Figure

Report number:

MANUFACTURER: Lamppukauppa Led Store Oy		
ADDRESS: Mesikukantie 16, 01300 VANTAA | www.ledstore.fi		
NAME: LED strip slim SOLO, 4000K, 24V, 7,2W/m, IP65, CRI91	SKU: STRIP72-24V-IP65-4000-COB-SLIM	TYPE: LED
SPECIFICATION: LED light strip	NOTES: Single color	MEASURED BY: Lamppukauppa Led Store Oy

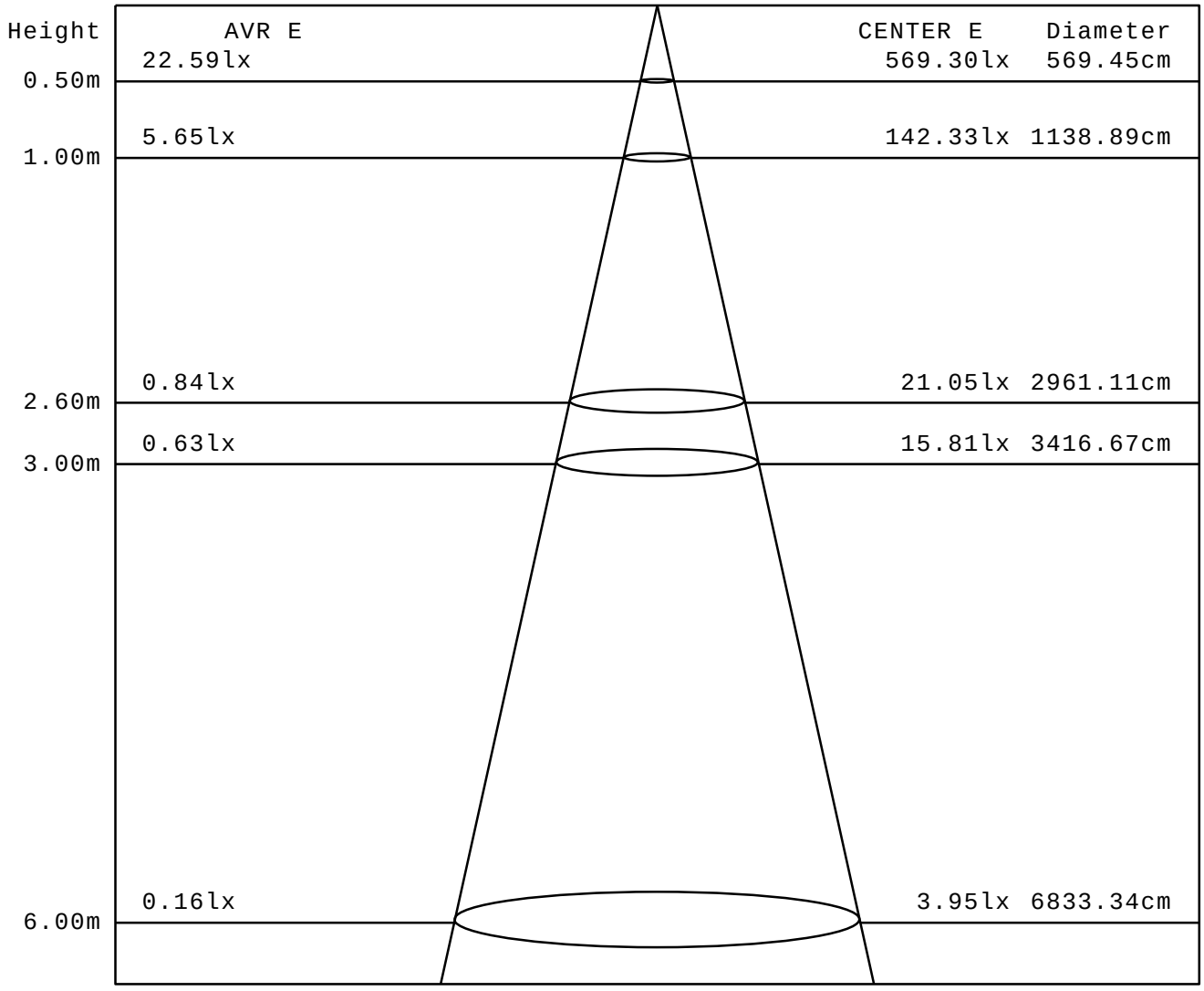

Angle:160.1deg

Test System:HopooColor HP880
Temperature:25.3DEG
Operators:
Test Date:09-20-2024

Test Set: 5.0deg/s C-Gamma (TYPE C)
Humidity:65.0%
Test Distance:1.000 m
Remarks:

ISOCANDELA DIAGRAM

Report number:

MANUFACTURER: Lamppukauppa Led Store Oy		
ADDRESS: Mesikukantie 16, 01300 VANTAA | www.ledstore.fi		
NAME: LED strip slim SOLO, 4000K, 24V, 7,2W/m, IP65, CRI91	SKU: STRIP72-24V-IP65-4000-COB-SLIM	TYPE: LED
SPECIFICATION: LED light strip	NOTES: Single color	MEASURED BY: Lamppukauppa Led Store Oy

UNIT: cd

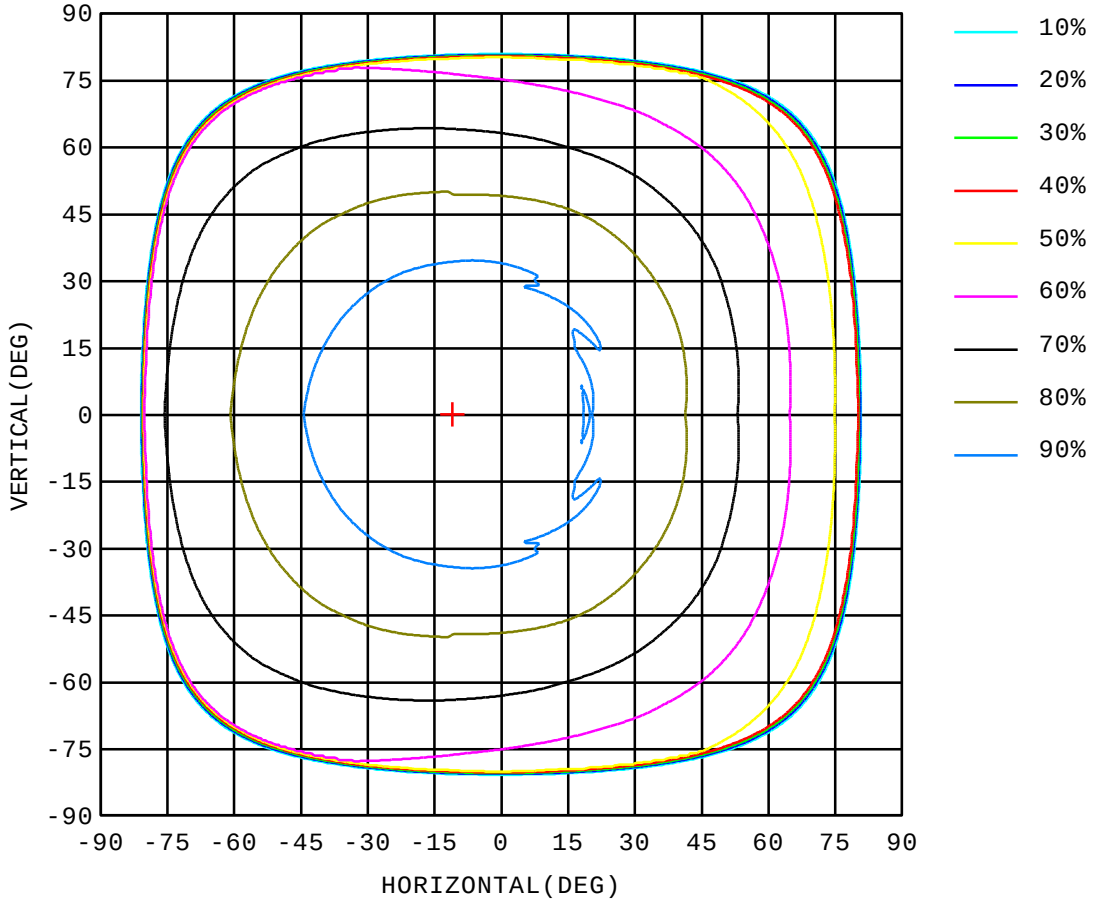

Test System:HopooColor HP880
Temperature:25.3DEG
Operators:
Test Date:09-20-2024

Test Set: 5.0deg/s C-Gamma (TYPE C)
Humidity:65.0%
Test Distance:1.000 m
Remarks: